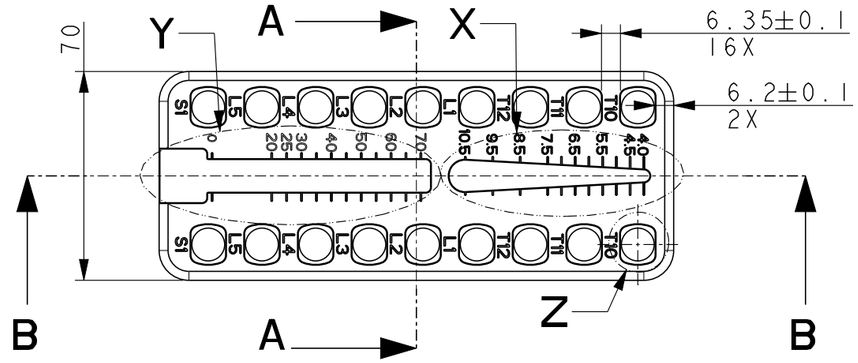

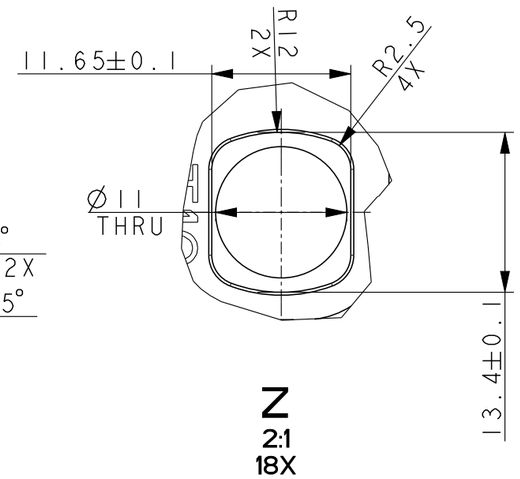

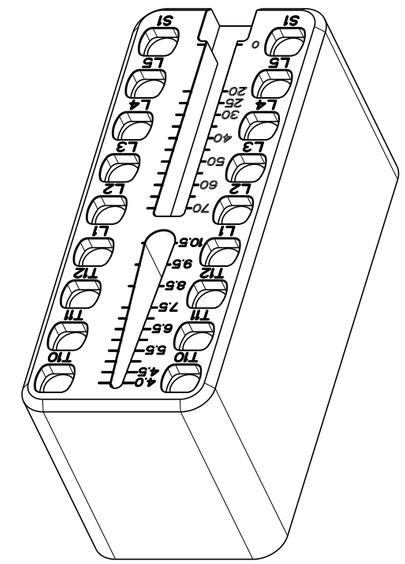

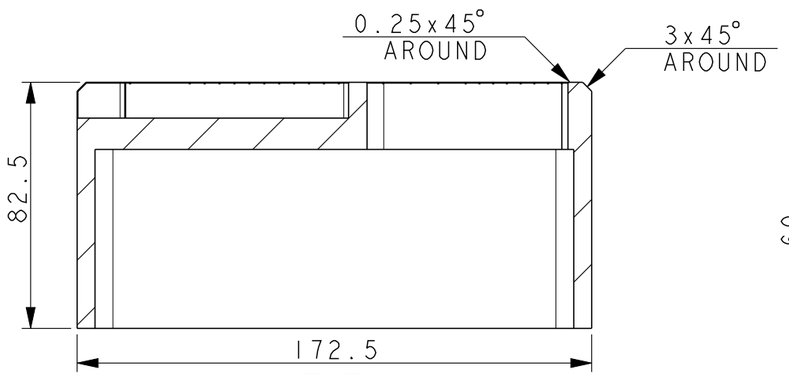

B-B

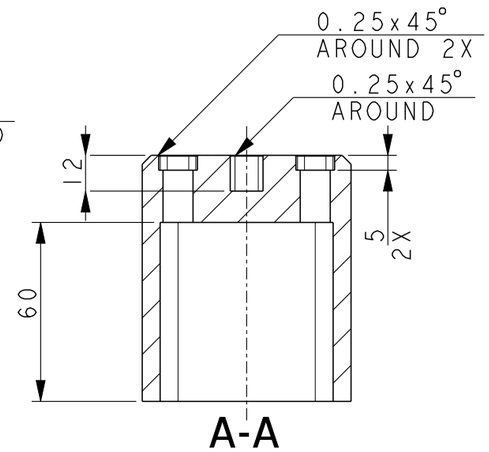

A-A

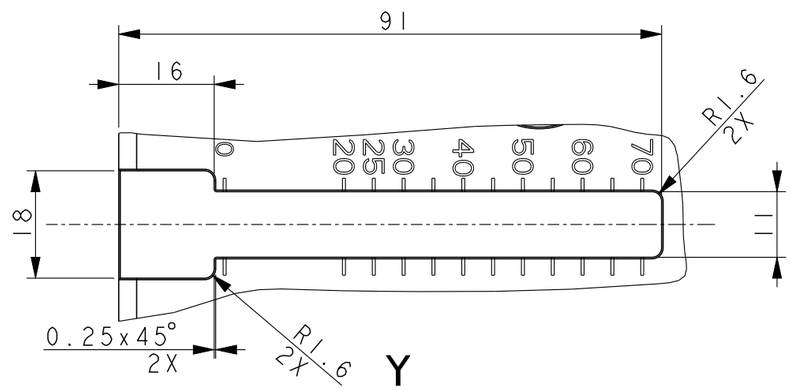

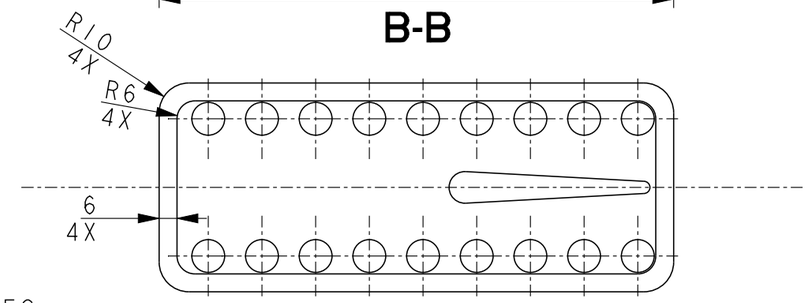

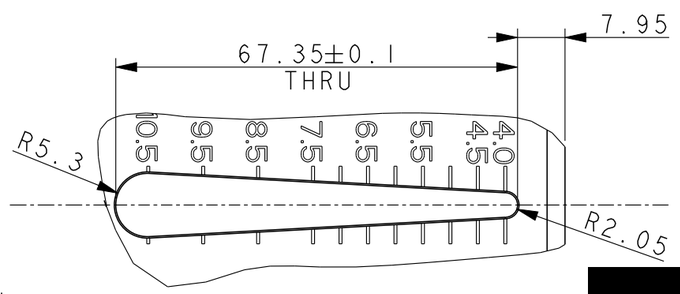

NOTES:
1. TECAPRO MT OR POLYSTONE P MG COLOR: BLACK
2. UNLESS OTHERWISE SPECIFIED BURR FREE, BREAK ALL SHARP EDGES 0.2, ALL INTERNAL RADII 0.2.
3. FINISH: UNIFORM MATTE FINISH FREE FROM TOOL MARKS
4. LASER MARK AS SHOWN: ALL TEXT IS FILLED.
   GLOBUS LOGO 3mm HIGH PER DT.015.
   PART NUMBER 3mm HIGH.
   CE LOGO PER DT.001.
   UDI INFORMATION PER WORK ORDER 1.5mm HIGH
   TULIP HEAD STYLES 19.7mm FROM OUTER EDGE, 30mm APART, AS DIMENSIONED IN VIEWS R-V ON SHEET 2.
   TULIP HEAD STYLE TEXT 3mm HIGH.
   SCREW LENGTH VALUES "0" to "70" 3.5mm HIGH, AS DIMENSIONED IN VIEW W.
   SCREW LENGTH HASH MARKS 0.5mm WIDTH, 2.75mm LENGTH, AS DIMENSIONED IN VIEW W.
   DIAMETER VALUES "4.0" to "10.5" 3.5mm HIGH, AS DIMENSIONED IN VIEW Q.
   DIAMETER HASH MARKS 0.5mm WIDTH, 13mm LENGTH, AS DIMENSIONED IN VIEW Q.
   VERTEBRAE MARKINGS "T10" to "S1" 4mm HIGH, AS DIMENSIONED ON SHEET 2.

[redacted]

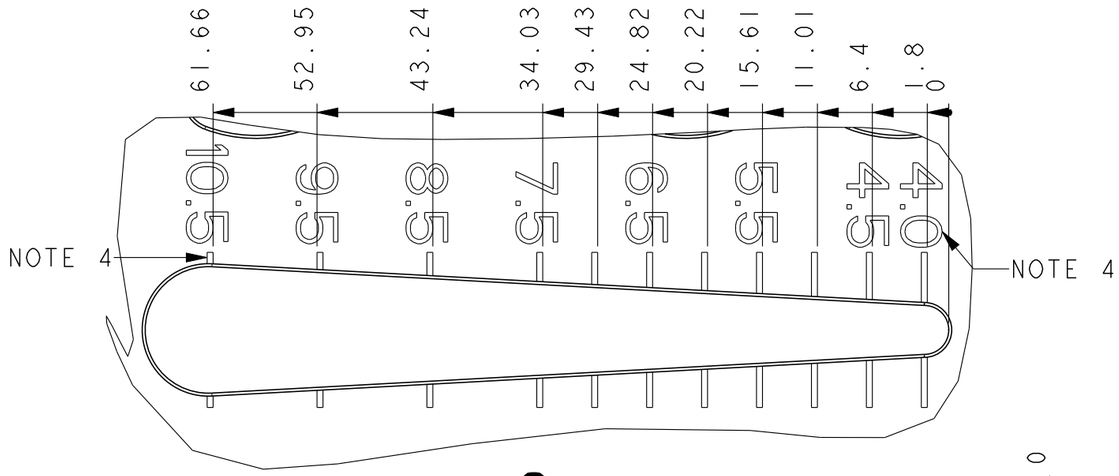

Q
2:1
NOTE 4

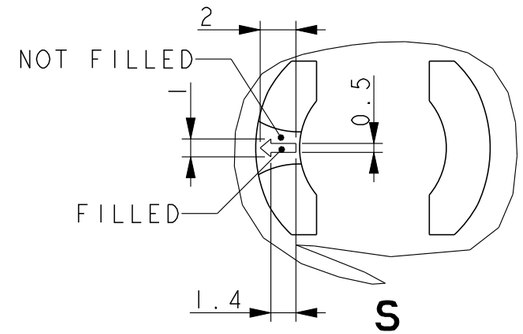

S
3:1
NOTE 4

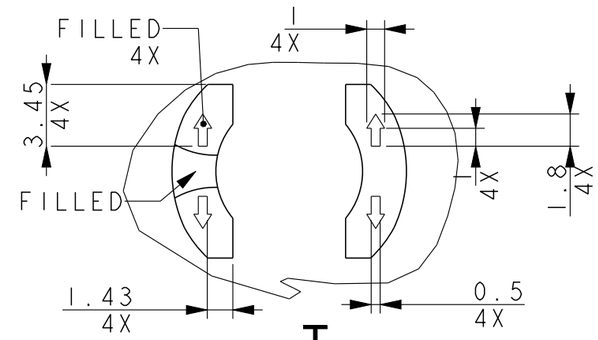

T
3:1
NOTE 4

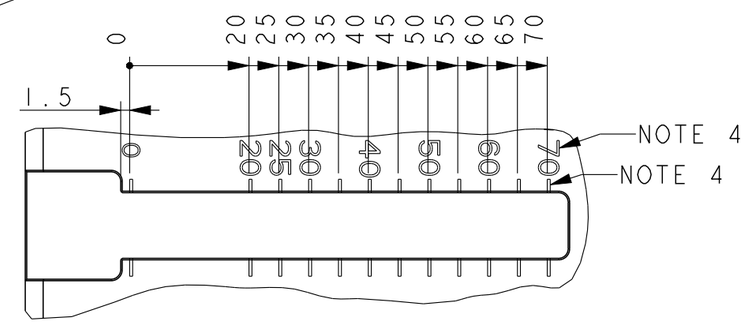

W
1:1
NOTE 4

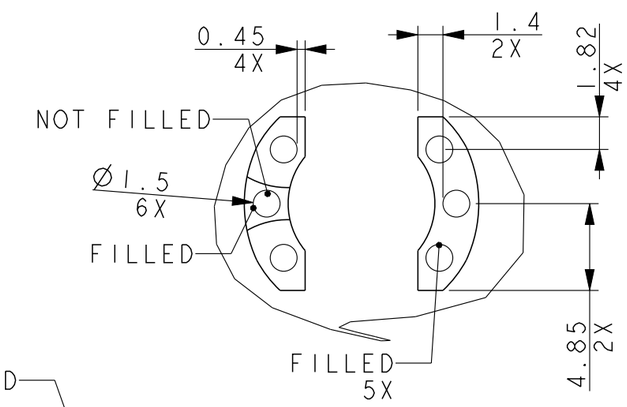

R
3:1
NOTE 4

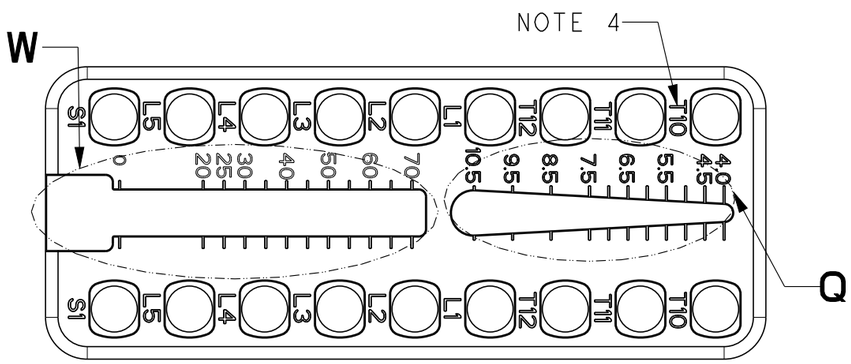

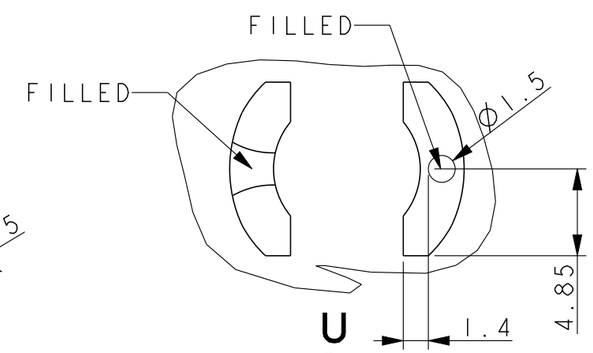

U
3:1
NOTE 4

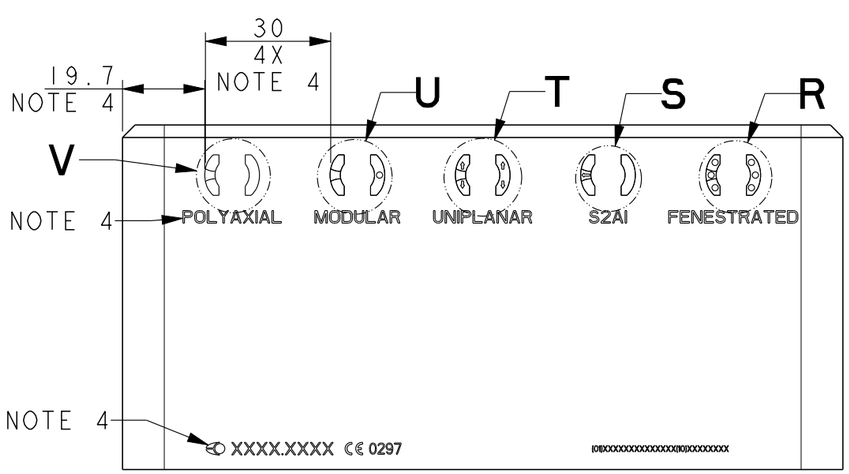

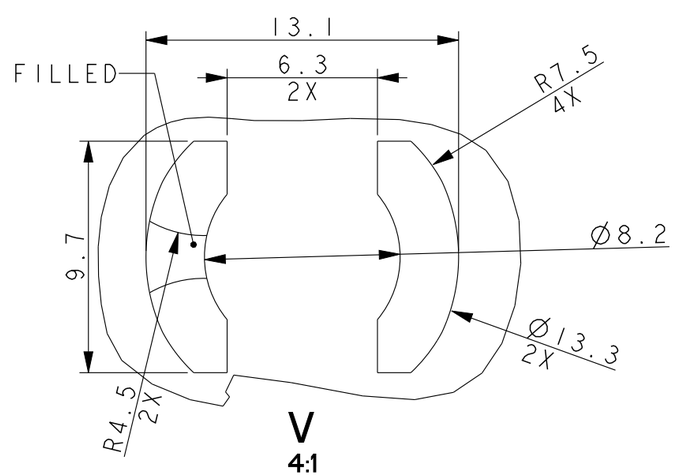

V
4:1
5X
NOTE 4

[redacted]